BJ-194Z

Multi-Function Power Meter

User Manual

Version：1.0

Revision 2023.09

Tel: +0086-023-67628702
www.cqbluejay.com
Add: 1802,Building 2,No.88,Jianxin East Road,Chongqing,400020,China
Email:tech@cqbluejay.com

Read me

When you use BJ-194… series multi-function meter, be sure to read this user manual carefully, and be able to fully understand the implications, the correct guidance of operations in accordance with user manual, which will help you make better use of BJ-194… series multi-function meter, and help to solve the various problems at the scene.

1. Before the meter turning on the power supply, be sure that the power supply within the provisions of the instrument;

2. When installation, the current input terminal must non-open, voltage input terminals must Non-short circuit;

3. Communication terminal (RS232/RS485) is strictly prohibited to impose on high pressure;

4. Be sure the instrument wiring consistent with the internal system settings;

5. When communicating with the PC, instrument communication parameters must be consistent with the PC.

- **Please read this user manual carefully**
- **Please save this document**

Directory

1. - SUMMARIZE

BJ-194Z Multi-function Power Meter is a LCD screen electrical panel power meter. It is the ideal choice for monitoring and measuring of 3P4W or 3P3W power systems.

It can measure all of the power parameters in power grid:

Current,	Active power,	Energy (Active/Reactive),
Voltage,	Reactive power,	Power factor,
Frequency,	Apparent power,	

With optional expansion modules, it can also transmit the parameter into 2*Relay output (2DO) and 4*Switch input (4DI).and 1*Analog output (1AO), For transformers, generators, capacitor banks and motors of the distributed detection, automatic control system, on-line monitoring display.

It can replace the traditional analog or many digital measurement instruments (such as ammeter, voltmeter, power meter, power factor meter, frequency meter, etc.) with the advantages of improving system reliability, making the on-site wiring convenient and reduce system cost.

With serial port, BJ-194Z can connect with PC; and use Modbus to set programming and read the data. Based on this power meters, you can simply set up a monitoring system with the IPC and central software.

APPLICATIONS

-. All power parameter measurement;

-. Energy Measurement and electrical fire monitor and control;

-. Replacing the three-phase power meter, three phase electricity transmitter;

-. Transformers, generators, capacitors and electric motors distributed detection;

-. Medium and low pressure systems;

-. SCADA, EMS, DCS integrators.

2. - FEATURES

2.1. - Electricity Metering

By means of an internal microprocessor it simultaneously measures:

Parameter	Symbol	A-phase	B-phase	C-phase	Total
Phase-line voltage	V	●	●	●	/
*Phase-phase voltage	V	●	●	●	/
Current	A	●	●	●	/
Frequency	Hz	/	/	/	●
Power factor	Cos Φ	●●	●●	●●	●
Active power	W	●	●	●	●
Reactive power	Var	●	●	●	●
Active energy	Wh	●	●	●	●
Reactive energy	Varh	●	●	●	●
4-Quadrant electric data	---	●	●	●	●

/: No such function
●: Display and communication.
●●: Only can read in Profibus-DP communication

Note:
Phase-phase voltage is Uab, Ubc, Uca, voltage data determined by the different wiring

The BJ-194Z delivers the visualization of parameters listed above by means of LCD type displays. In the main display area shows 4 power parameters, with other display area show the various parameters and state of meter on each page jump. For more details of measurement parameters please refer to the subsequent for displays introduction and Profibus-DP communication instructions.

OTHER FEATURES

- Low-size (96 x 96 mm), panel-mounting meter.
- True R.M.S. measuring system.
- Instantaneous, maximum and minimum values of each measured parameter.
- Energy measurement (indication through a lighting led).
- Profibus-DP type communication to a PC.

2.2. – Technical parameters

- Working Power

AC/DC 90-240V, 45-65Hz
DC 20-60V (Optional)
Maximum power consumption 6W

- Input

Voltage	Rated 300V L-N, (optional 100V L-N)
Current	Rated 5A (optional 1A)
Frequency	45-65Hz
Current overload	1.2 times rated continuous; 1 seconds for 10 times the rated
Voltage overload	1.2 times the rated continuous; 10 seconds for 2 times the rated

- Load

Voltage: <0.1VA / phase (rated 220V)
Current: <0.4VA / phase (rated 5A)

- Reference Standard

Active energy	IEC 62053-21:2018
Reactive energy	IEC 62053-23:2018

- Accuracy

Parameter	Accuracy	A phase	B phase	C phase	All
Voltage	0.2	V1	V2	V3	
Current	0.2	A1	A2	A3	
Active Power	0.5	W1	W2	W3	W
Reactive Power	0.5	var1	var2	var3	var
Apparent Power	0.5	VA1	VA2	VA3	VA
Power Factor	0.5	PF1	PF2	PF3	PF
Active Energy	1.0s				Wh
Reactive Energy	2.0s				varh
Frequency	0.05				Hz

- Dielectric strength

IEC / EN 61010-1:2010
2kV AC RMS 1 minute, between input / output / case / power supply

- EMC Test

Parameter	Standard	Test voltage
Discharge immunity test	IEC-61000-4-2 level 4	8kV
Fast transient burst immunity test	IEC61000-4-4 level 3	Input 1kV; Power supply 2kV
Surge (Shock) immunity test	IEC61000-4-5 level 4	Common mode :4kV

- Work environment

Temperature: -20°C ~ +60°C
Humidity: RH 20% ~ 95%（Non-condensation）

- Storage environment

Temperature: -25°C ~ +70°C

Humidity: RH 20% ~ 95%

- Protection

Panel: IP54
Case: IP20

- Dimensions

L × W × H =96mm×96mm×75mm

- Installation hole size

L × W = (91+0.8mm) × (91+0.8mm)

3. - INSTALLATION AND START-UP

The manual you hold in your hand contains information and warnings that the user should respect in order to guarantee a proper operation of all the instrument functions and keep it in safety conditions. The instrument must not be powered on and used until its definitive assembly is on the cabinet's door.

If the instrument is not used as manufacturer's specifications, the protection of the instrument will be damaged.

When any protection failure is suspected to exist (for example, it presents external visible damages), the instrument must be immediately powered off. In this case contact a qualified service representative.

3.1.- Installation

Mounting

Instrument is to be mounted on panel (cut-out *91+0.8 x 91+0.8 mm*). Keep all connections into the cabinet.

Please note that with the instrument powered on, the terminals could be dangerous to touch and cover opening actions or elements removal may allow accessing dangerous parts. Therefore, the instrument must not be used until this is completely installed.

Dimension: **Unit: mm**

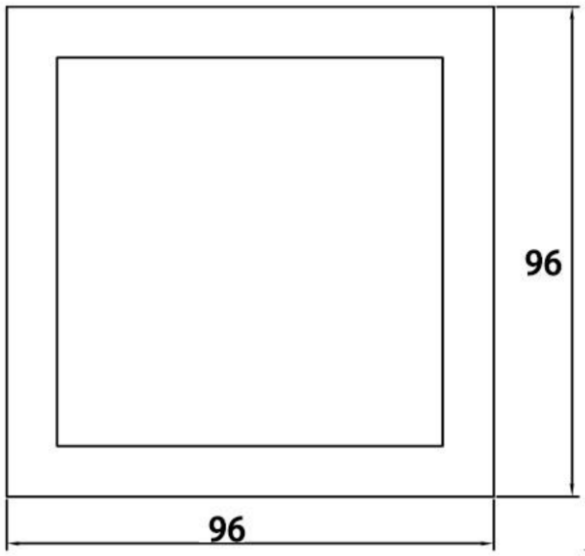

Front view

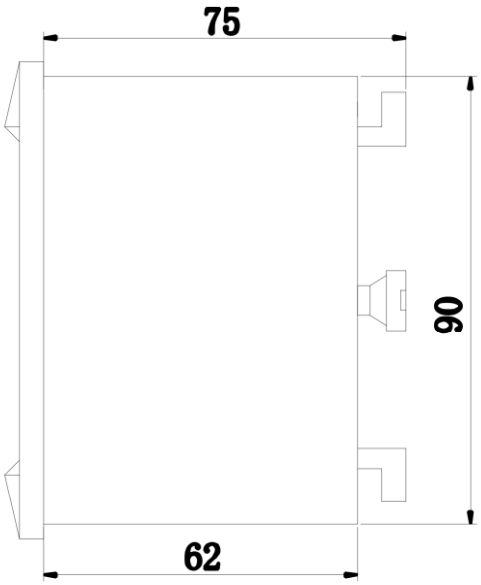

Side view

Notes:

Input signal: BJ-194… series using a separate acquisition calculate for each measurement channel, to ensure consistent in use, for different load forms, it's a variety of connection mode. Access wire shall be met: the current 2.5 square mm, voltage of 1.5 square millimeters.

Voltage input:

Input voltage should not exceed the rated input voltage products (120Vac or 450Vac),
Otherwise, you should use external CT. Suggest 1A fuse be installed in the voltage input side.

Current Input:

Standard input current is 5A, if greater than 5A should use external CT.
When the CT is connected with other instruments, make sure wiring methods be used in series.

Before remove the current input connection, must be sure to disconnect the primary circuit or shorted secondary circuit of CT. In order to facilitate disassembly, please do not connect to CT directly, and the terminal block is suggested.

Sequence of wire:

Please make sure that the input voltage and current corresponding to the same phase sequence, and the same direction; Otherwise, the Values and symbols will be wrong! (Power and Energy)

The input network configuration of instrument depends on the CT number of the system:
in the condition of 2 CT, select the three-phase, three-lines two components;
in the condition of 3 CT, select the three-phase, four-lines three component mode.

Instrument connection mode, set of the instrument (programming input network NET) should be the same load wiring as measured wiring. Otherwise, the measurement instrument will lead to incorrect voltage or power.

In three-phase three-wire mode, the measurement and shows the line voltage;
In three-phase four-wire mode, the measurement and shows the phase voltage.

Auxiliary power:

BJ-194… series with universal (AC / DC) power input, if not for a special statement, we provide the 220VAC/DC or 110VAC/DC power interface for standard products. Instruments limit work power supply: AC / DC: 90-240V, please ensure that the auxiliary power can match with BJ-194… series meter to prevent damage to the product.

A. Suggest install 1A fuse in the fire line side.
B. For the areas with poor power quality, suggest install lightning surge suppressor and rapid burst suppressor to prevent lightning strikes.

3.2. - Connection Terminal

Upper connection terminal

15	16	50	49	48	47	60	59	58	2	1
		Eq-	Eq+	EP-	EP+	GND	RS485B	RS485A	Power supply	

47. Total active energy (+)
48. Total active energy (-)
49. Total reactive energy (+)
50. Total reactive energy (-)

*1. *Supply voltage input: 0 V*
*2. *Supply voltage input: 220 Vac.*
58. RS-485 (+)
59. RS-485 (-)
60. RS-485 (GND)

Middle connection terminal

22	21	20	19	70	71	72	73	74
DO2		DO1		COM	DI1+	DI2+	DI3+	DI4+

20. Route 1 digital output (+)
19. Route 1 digital output (-)
22. Route 2 digital output (+)
21. Route 2 digital output (-)

70. Digital input COM pin
71. Route 1 digital input (+)
72. Route 2 digital input (+)
73. Route 3 digital input (+)
74. Route 4 digital input (+)

Lower connection terminal

14	13	12	11	9	8	7	6	5	4
Un	Uc	Ub	Ua	C-phase Current		B-phase Current		A-phase Current	

11. Voltage A-phase input
12. Voltage B-phase input
13. Voltage C-phase input
14. Neutral Voltage input

4. Current A-phase - S1 input
5. Current A-phase - S2 input
6. Current B-phase - S1 input
7. Current B-phase - S2 input
8. Current C-phase - S1 input
9. Current C-phase - S2 input

Note:

The terminal pin definition may change depends on customer order; please refer to the label on the meter!

3.3. – Typical Wiring (3P4W)

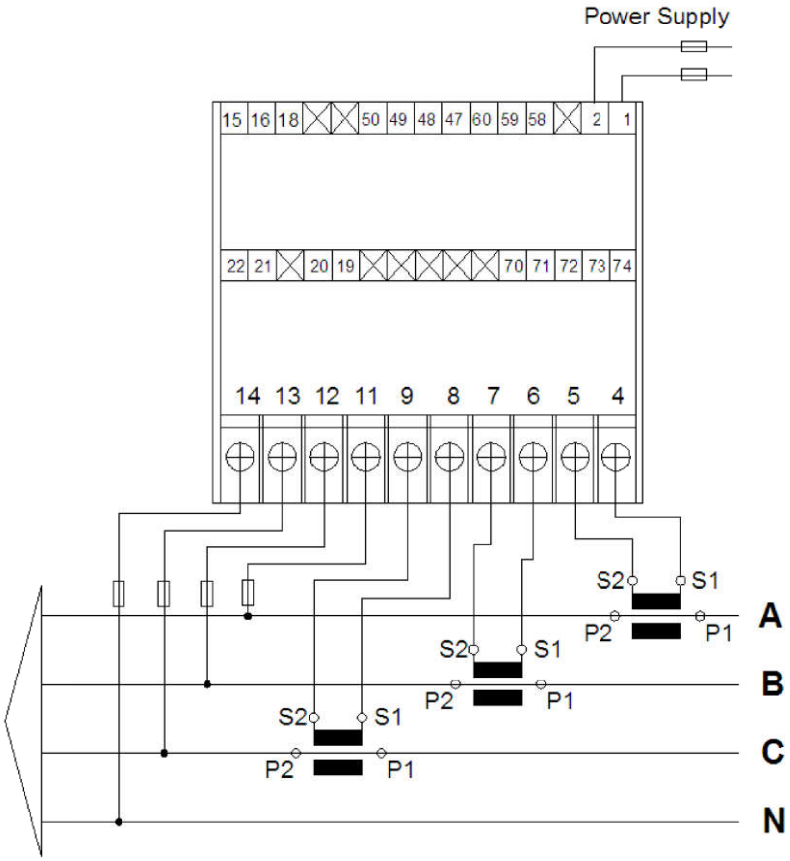

Note:

This connection drawing is for reference only; the actual connecting terminal please refer to the label on the rear part.

WARMINGS!

If power = -0.01 is shown for any of the phases and voltage and current are not zero for this phase, check out following points:

- Assure that A, B and C phases coincide in voltage and current.
- Correct polarity? Reverse the current transformer placed at this phase.

4. - SCREEN DISPLAY

4.1.- Full Symbol in Display Screen

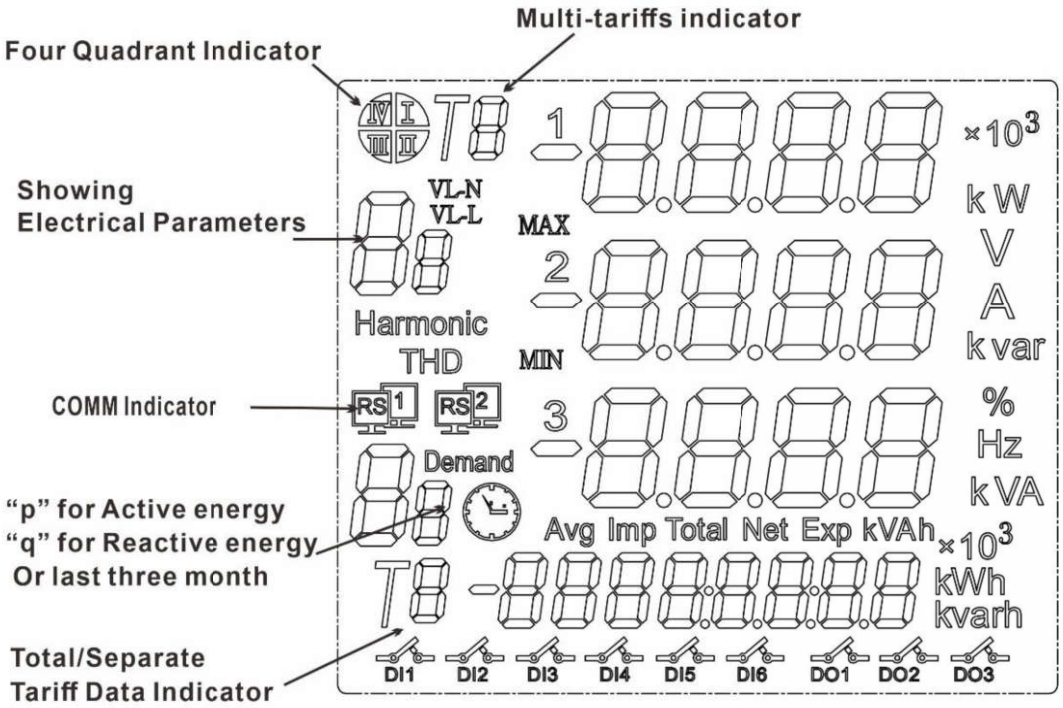

4.2.- Introduction of Screen Pages

Screen No.	Screen interface	Explanation
- 1 -	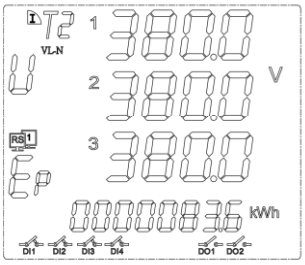	Three phase voltage Ua, Ub, Uc; **Note:** In high voltage measurement, X10^3 mean the showing value multiplied by 1000, in the screen diagram mean the voltage is 10X1,000=10,000volt Bottom character "Ep" show **total active energy** is 83.6KWh.
	Note: Detail information for each symbol, please refer **chapter 5**, Surround area shows the system information, in other screen are same: DI1 DI2 DI3 DI4 show DI1, DI2, DI3, DI4 in the closed; DO1 DO2 show DO1, DO2 opened; RS1 flicker show Communication Rx/Tx normal;	
- 2 -	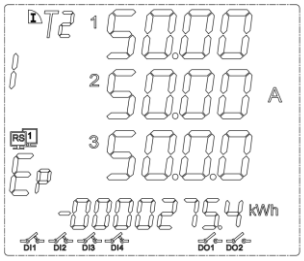	Three-phase current Ia, Ib, Ic. Bottom **Ep** shows **total negative active energy.**
- 3 -	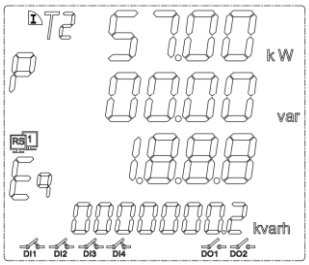	Total active power, Total reactive power, and Total factor. Press ↵ can switch to show independent three phase active (P), Reactive(Q), Apparent power(S) value. Bottom **Eq** shows **total reactive energy.**
- 4 -	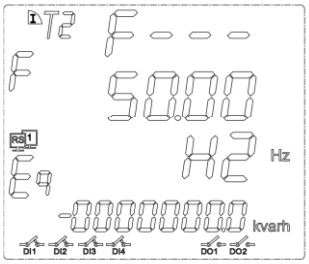	Frequency of grid. Bottom **Eq** shows **total negative reactive energy.**

Note:

In special requirement order or firmware iteration, the screen may add display pages, please ask the sales team to get latest manual.

5. - OPERATION MODE

When the device is powered up, the entire symbol will be on, and the meter starts to self- test. After few seconds, the meter is ready for operation and shows firmware, then automatic jump to The first screen.

Button	In Monitor Screen	In Config Sub-menu	In Parameter Setup
◀	Screen will move to previous or next page	Move cursor up and down to select function	Move setting cursor to left
▶			Scroll selection number 0 ~ 9
SET	Call out password screen	Exit & roll back to up level menu	
↵	Call out Sub-screen or Version screen	Confirm the values & Entry or jump to down level menu	

Note: In Setup menu, if changed the setting value, press **SET** for exit menu, device will call out confirm screen ask "SAVE"

Then press **SET** *exit without saving*
press ↵ *save and exit.*

6. - SETUP PROCEDURE

The SETUP procedure of the BJ-194Z is performed by means of several SETUP options. There has a password to protect unexpectedly enter the Setup menu. Once into the Setup menu, use the keyboard to select different options and enter required variables:

6.1.- Enter Setup Menu

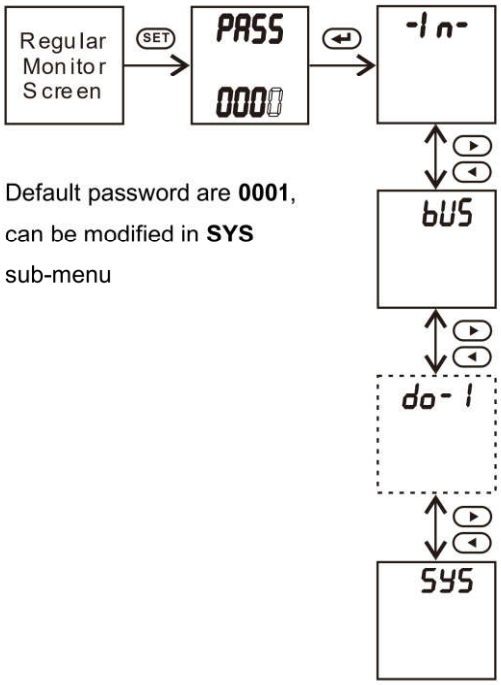

Default password are **0001**, can be modified in **SYS** sub-menu

Input signal setup

Refer to chapter 6.2

Communication port setup

Refer to chapter 6.3

Digital output (relay) port setup

Refer to chapter 6.4

Note: If do not select port, no such pages

System parameter setup

Refer to chapter 6.5

6.2. - Input Signal Setup

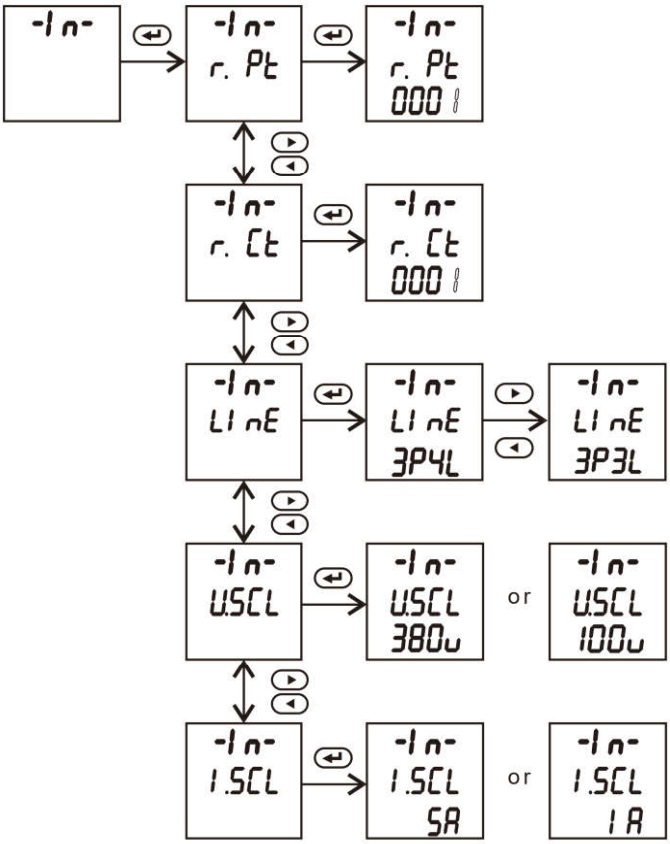

Voltage transformer ratio(1)*

Default **0001**

Current transformer ratio(1)*

Default **0001** or based on order requirement

Power grid mode

Default **3P4L**(2)*

Rated voltage scale

Default **380V**(3)*

Rated current scale

Note: only related to pulse constant **chapter 7**

Default **5A**

Notes:

(1) In medium or high voltage system, set this value can expand measuring range, values represent the current transformer (primary side voltage) / (secondary side current). Must set **U.scl** in 100V or other specified VT secondary voltage.

(2) If in order specified power grid are 3P3L, Blue Jay will connect **Un** and **Ub** terminal internally. In screen only show phase to phase parameter

(3) Blue Jay calibrate meter under 380V range, high-quality linearity performance ensures that the meter can accurately measure in the lower voltage range. That can compatible with 120V, 220V, 230V, 240V, 277V system.

If need to use in different voltage scale or different types CT, please contact our sales team for more help.

6.3. - Communication Port Setup

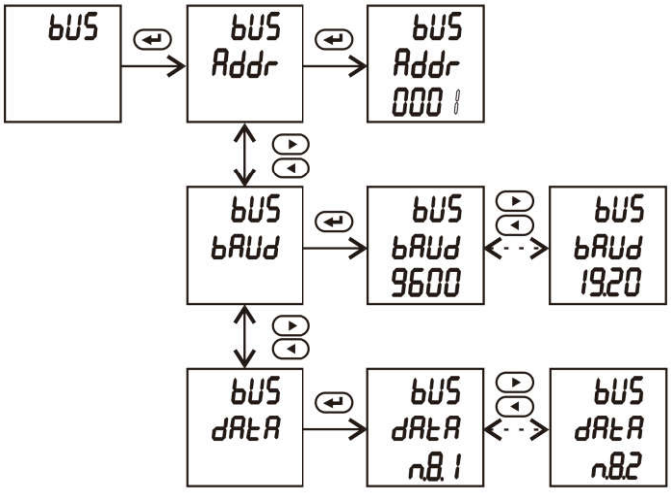

Modbus address (1)*

Default **0001**

Comm port baud ratio (2)*

Default **9600** (2)*

Comm port data format

Default **n.8.1,** can select n.8.1 / E.8.1 / n.8.2

Note:

(1) Modbus address setup range 1-247.

(2) Baud ratio can select 1200 / 2400 / 4800/ 9600 / 19200, regular meter equipped communication port max baud ratio are 19200bps, if need higher speed, please contact Blue Jay sales team.

6.4. - Digital Output Setup

DO port is optional module, if do not choose this external port, in Setup menu do not have this sub-menu, and this chapter are invalid.

When device has more than one DO port, you can set the DO-2, as same step.

The physical DO relay standard is 5A 250VAC / 5A 30VDC.

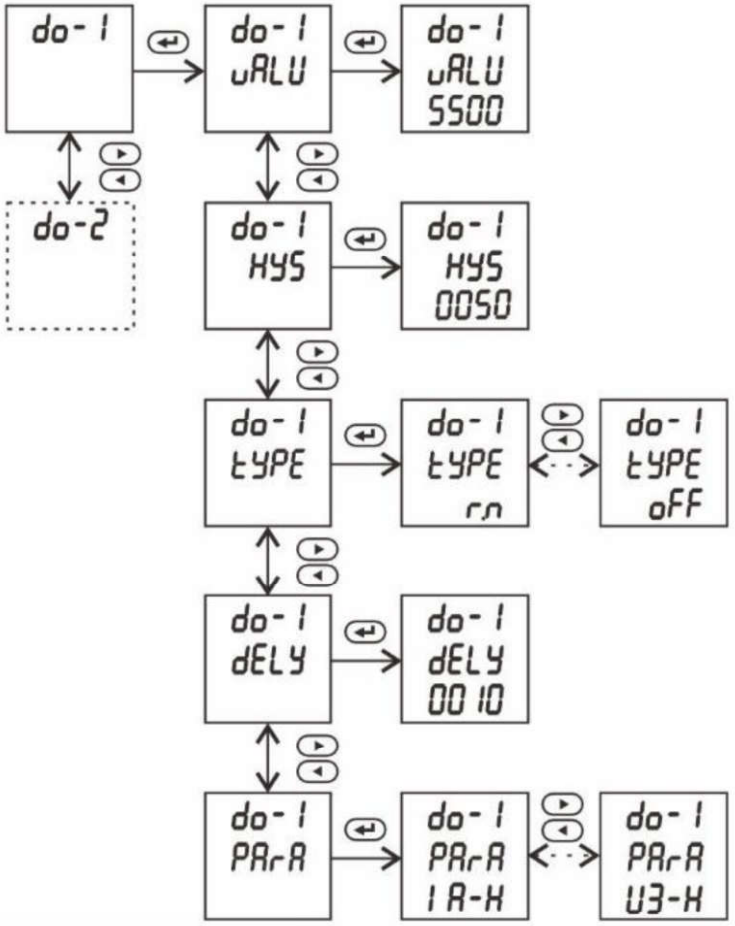

Relay trig threshold, value related to secondary side

Default **5500** (1)*

Hysteresis (2)*

Default **0050**

DO working mode (3)*

Default **r.n**

rn Remote
ALr Auto Trig
oFF Turned Off

Delay timer of the trig (4)*

Default **0010**

Parameter be trigged (5)*

Default **1A-H**

Notes:

(1) Relay trig threshold value have different units:

Voltage - 0.1V	Active power - 0.1W	Power factor - 0.001
Current - 0.001A	Reactive power - 0.1VAR	Frequency- 0.01HZ

(2) Hysteresis value is for prevent unexpected relay release, only the measurement parameter falls back lower / over a certain difference value from trig threshold, the DO can be released.

Formula: **Xm** < **X** - **Xr** (Upper edge trig) or **Xm** > **X** + **Xr** (Lower edge trig)

Xr = uALU **x** HYS / 10000

Xm is measurement rms value of electrical parameter

Example: Trig threshold value 3.700A; hysteresis value 0.03; After relay trigged, when measured value **Xm** < 3.589A (3.700-3.700*0.03), the relay will be released.

(3) DO port preset 2 types of working mode, and can be **Turned Off**

Auto Trig – When the measurement parameter over or lower the preset uALU, the DO relay act, terminal of DO+ / DO- shorted. After the measurement parameter fall back to a certain value can be released relay coil.

Remote - DO relay act by Profibus-DP control command, user can use function code 05 to trig single relay, device Profibus-DP port follow MODBUS-RTU protocol, command as following:

Host inquiry:

Addr.	Code	No.1 Relay register	Relay value (FF00:close; 0000: open)	CRC
01	05	00 01	FF 00	DD FA

Slave response:

Addr.	Code	No.1 Relay register	Relay value (FF00:close; 0000: open)	CRC
01	05	00 01	FF 00	DD FA

(4) In **Auto trig** mode, after **Xm** > uALU in the specified delay time, DO relay act. Setting value from 0.000sec (no delay) to 999.9 sec, default 0010 = 1sec

In **Remote** mode, if setup value = 0, output is **Level type**,

If set value = 0, output is **Pulse type**, value = pulse width

(5) Parameter of the DO can be set, preset 52 types parameter that can be used in auto trig mode

UA-H A phase voltage upper trig
Ub-H B phase voltage upper trig
UC-H C phase voltage upper trig
U3-H Any one of Ua / Ub / Uc3 upper trig
IA-H A phase current upper trig
Ib-H B phase current upper trig
IC-H C phase current upper trig
I3-H Any one of Ia / Ib / Ic3 upper trig
PA-H A phase active power upper trig
Pb-H B phase active power upper trig
PC-H C phase active power upper trig
PS-H Total active power upper trig
qA-H A phase reactive power upper trig
qb-H B phase reactive power upper trig
qC-H C phase reactive power upper trig
qS-H Total reactive power upper trig
SA-H A phase apparent power upper trig
Sb-H B phase apparent power upper trig
SC-H C phase apparent power upper trig
SS-H Total apparent power upper trig
PF-H Total power factor upper trig
Fr-H Frequency upper trig
di 1H DI1 closed trig
di 2H DI2 closed trig
di 3H DI3 closed trig
di 4H DI4 closed trig

Note: If in screen show "XX -L" mean lower limit trig, for DI port mean open loop trig

*** Delay & Hysteresis logic**

Example in upper limit alarm of A phase voltage:

U-d mean detected Ua
U-set mean Alarm value of A phase

Alarm will not trigged	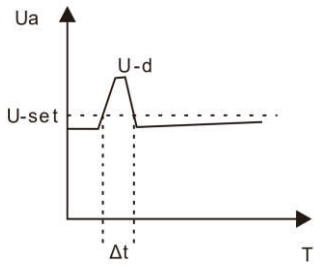	If Δt < Delay setting value, The Alarm will not trig, that can avoid influence of the transient electrical parameters
Alarm trigged	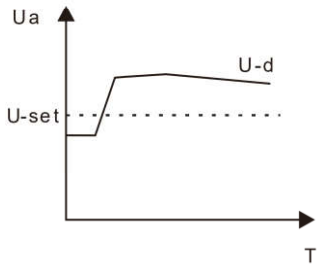	When U-d over U-set, and after delay setting time cool down, the value still over U-set, the alarm trigged
Alarm will not released	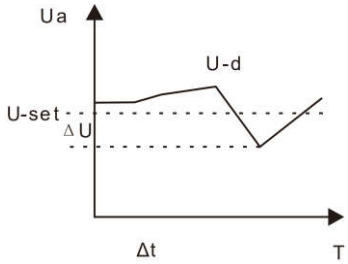	If ΔU < Hysteresis value The Alarm will not release, that can avoid influence of parameter unexpected fluctuations
Alarm released	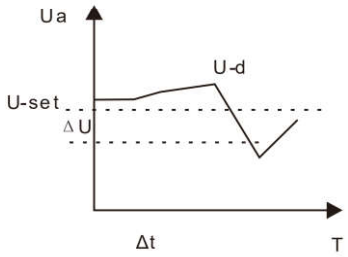	When U-d lower than (U-set -Hysteresis) The Alarm will release

6.5. - System Setting

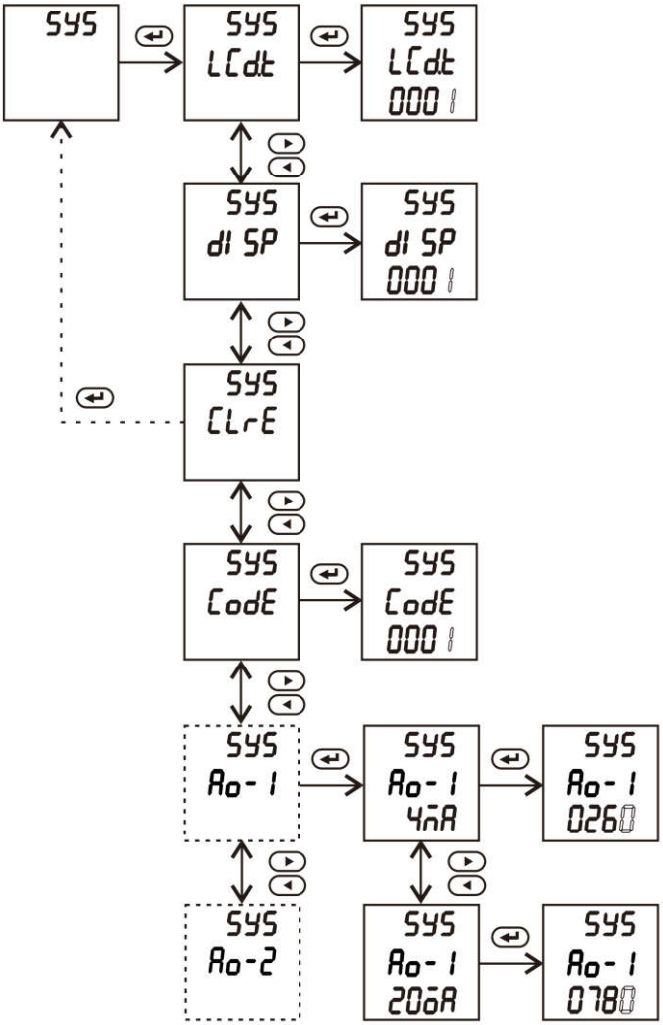

Duration of LCD backlight, unit: **Min**

Default **0005**

Screen scroll interval, unit: **sec**

Default **0000**(1)*

Reset energy counter record(2)*

Reset password (3)*

Analog output zero span calibration setup(4)*

Analog output full span calibration setup(4)*

Notes:

(1) Set 0000 mean can manually switch each monitor screen pages.

(2) Press [↵] device will roll back to **SYS** root menu, only in the exit screen press [↵] to trigger clear operation!

(3) If reset the password, please keep the password in safety, or only return to Blue Jay for reset new password!

(4) Variable step value is 2/1000. Blue Jay already do calibration before shipping, please use high precision ammeter or voltmeter as reference standard.

7. - PULSE OUTPUT

BJ-194Z provides 2* pulse output for the total active energy & total reactive energy.

The host / PLC / DI module can cumulative the data of both the active and reactive power energy sent by the pulse from opt coupler relay.

1). Electrical specification: voltage VCC ≤ 48V, Iz ≤ 50mA.

2). Pulse: 5000 imp / kWh, pulse up to 80ms.
This means: When the device detects 1 kWh, the port will generate 5000 pulse

Note: 1 kWh energy is for *secondary side energy data*, if there have PT and CT accessed; primary side energy data is "1 kWh ×PT ratio× CT ratio".

Voltage (V)	Current (A)	Pulse constant (imp / kWh)
380 or 220	5	5000
	1	20000
100	5	20000
	1	80000

Example:

In measure time "T", the received total pulse is "N",
Primary side input of voltage is 10Kv
Primary side input of current is 400A.
Secondary side measurement range is 100V and 5A.

In the time "T", energy accumulated is: N / 20000 × 100 × 80

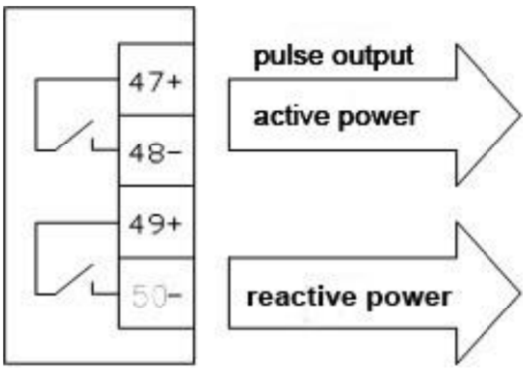

8. - COMMUNICATION INTERFACE

8.1.- Profibus Comm port introduction

As the Profibus-DP protocol has a lot of content, please refer to SIEMENS related standards for its link layer protocol. In this file only contains the application layer defined in the 194 series product, and briefly explained of physical port.

-. GSD file

GSD file is General Station Description file. This file contains the inherent information related to the device, such as the device model and manufacturer. It also defines the communication protocol description information such as the baud rate, upstream and downstream message length supported by the communication.

GSD file do not send with products shipping, please contact Blue Jay Tech team (tech@cqbleujay.com) before communication test

-. Physical layer of the port:

The physical port uses the PROFIBUS-DP support network chip VPC3+C, compatibility of the physical layer and link layer can seamless link to other network.

Baud rate is adaptive and determined by the device configuration,
Range is: 0.96 ~ 12Mbps.
Slave address: 1 ~ 127
Data communication length: Rx: 2
Tx: 128

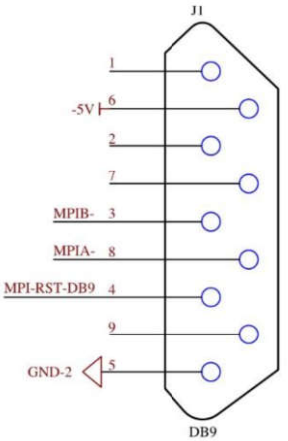

INTERFACE DEFINITION

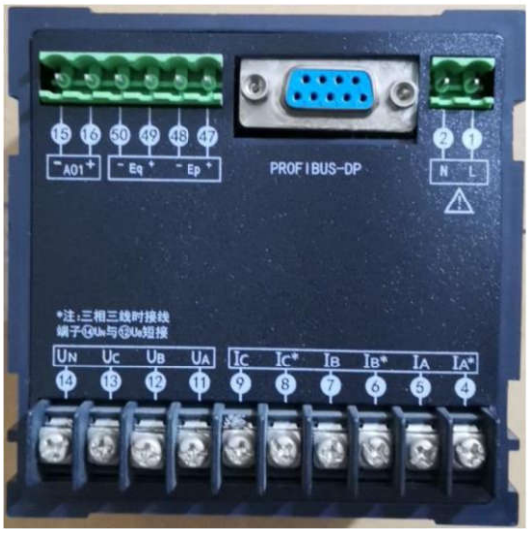

8.2.- Register Map

194-profibus already adapt address mapping, so the user does not need to send commands to read / write data; So divide standard model 194 series Modbus register map to 9 pages, first two bytes of each page indicate the page number and communication status.

Page_1:

Basic parameter of primary side

Addr.	Item	Format	Length	Description
0x0	Page	char	0.5	0~15: for page 1 to 16
	Status	char	0.5	00: for success reading
0x1	Ua	float	2	Phase to Line Voltage, Unit: V
0x3	Ub	float	2	
0x5	Uc	float	2	
0x7	Uab	float	2	Phase to Phase Voltage, Unit: V
0x9	Ubc	float	2	
0xB	Uca	float	2	
0xD	Ia	float	2	Three phase Current, Unit: A
0xF	Ib	float	2	
0x11	Ic	float	2	
0x13	Pa	float	2	Individual phase active power, Unit: kW
0x15	Pb	float	2	
0x17	Pc	float	2	
0x19	P∑	float	2	Total active power, Unit: kW
0x1B	Qa	float	2	Individual phase reactive power, Unit: kVar
0x1D	Qb	float	2	
0x1F	Qc	float	2	
0x21	Q∑	float	2	Total reactive power, Unit: kVar
0x23	Sa	float	2	Individual phase apparent power, Unit: kVA
0x25	Sb	float	2	
0x27	Sc	float	2	
0x29	S∑	float	2	Total apparent power, Unit: kVA
0x2B	PFa	float	2	Individual phase power factor, 0~1.000
0x2D	PFb	float	2	
0x2F	PFc	float	2	
0x31	PF∑	float	2	Total power factor, 0~1.000
0x33	FR	float	2	Frequency, Unit:0.01Hz
0x35	Ep+	float	2	Positive active energy, Unit: kWh
0x37	Ep-	float	2	Negative active energy(generate), Unit: kWh
0x39	Eq+	float	2	Inductive reactive power, Unit: kVarh
0x3B	Eq-	float	2	Capacitive reactive power, Unit: kVarh

Page_2:

Parameter of secondary side

Addr.	Item	Format	Length	Description
0x0	Page	char	0.5	0~15: for page 1 to 16
	Status	char	0.5	00: for success reading
0x1	Ua	int	1	Phase to Line Voltage, Unit: 0.1V
0x2	Ub	int	1	
0x3	Uc	int	1	
0x4	Uab	int	1	Phase to Phase Voltage, Unit: 0.1V
0x5	Ubc	int	1	
0x6	Uca	int	1	
0x7	Ia	int	1	Three phase Current, Unit: 0.001A
0x8	Ib	int	1	
0x9	Ic	int	1	
0xA	Pa	int	1	Individual phase active power, Unit: W
0xB	Pb	int	1	
0xC	Pc	int	1	
0xD	P∑	int	1	Total active power, Unit: W
0xE	Qa	int	1	Individual phase reactive power, Unit: Var
0xF	Qb	int	1	
0x10	Qc	int	1	
0x11	Q∑	int	1	Total reactive power, Unit: Var
0x12	Sa	int	1	Individual phase apparent power, Unit: VA
0x13	Sb	int	1	
0x14	Sc	int	1	
0x15	S∑	int	1	Total apparent power, Unit: VA
0x16	PFa	int	1	Individual phase power factor, 0~1.000
0x17	PFb	int	1	
0x18	PFc	int	1	
0x19	PF∑	int	1	Total power factor, 0~1.000
0x1A	FR	int	1	Frequency, Unit:0.01Hz
0x1B	Ep+	Int32	2	Positive active energy, Unit: Wh
0x1D	Ep-	Int32	2	Negative active energy, Unit: Wh
0x1F	Eq+	Int32	2	Inductive reactive power, Unit:Varh
0x21	Eq-	Int32	2	Capacitive reactive power
0x23	Ang_Ua	int	1	Phase A voltage angle, unit is 0.1 degree
0x24	Ang_Ub	int	1	Phase B voltage angle, unit is 0.1 degree
0x25	Ang_Uc	int	1	Phase C voltage angle, unit is 0.1 degree
0x26	Ang_Ia	int	1	Phase A current angle, unit is 0.1 degree
0x27	Ang_Ib	int	1	Phase B current angle, unit is 0.1 degree
0x28	Ang_Ic	int	1	Phase C current angle, unit is 0.1 degree
0x29	DO	int	1	Digital output: Bit 0~1 show channel 1and channel 2 status 0 for open, 1 for closed

0x2A	DI	int	1	Digital input: Bit 0~3 show channel 1 to channel 4 status 0 for open, 1 for closed
0x2B	DZ	int	1	Alarm trig： Bit 0~4 show alarm 1 to alarm 5 status 0 for open, 1 for closed
0x2C-0x32	Reserved			/
0x33	TIME.year	int	1	Internal RTC real time clock: Year - Month – Date-Hour - Minutes - Seconds
0x34	TIME.month	int	1	
0x35	TIME.date	int	1	
0x36	TIME.hour	int	1	
0x37	TIME.minute	int	1	
0x38	TIME.second	int	1	
0x39	TIME.day	int	1	

Page_3:

Advance parameter of primary side

Addr.	Item	Format	Length	Description
0x0	Page	char	0.5	0~15: for page 1 to 16
	Status	char	0.5	00: for success reading
0x1	Pde	float	2	Present active power demand, Unit: W
0x3	Qde	float	2	Present reactive power demand, Unit: var
0x5	Sde	float	2	Present apparent power demand, Unit: VA
0x7	Pdmax	float	2	Active power demand in this month
0x9	Qdmax	float	2	Reactive power demand in this month
0xb	Sdmax	float	2	Apparent power demand in this month
0xd	Pdmax-m1	float	2	Active power demand in last month
0xf	Qdmax-m1	float	2	Reactive power demand in last month
0x11	Sdmax-m1	float	2	Apparent power demand in last month
0x13	Pdmax-m2	float	2	Active power demand in month before last month
0x15	Qdmax-m2	float	2	Reactive power demand in month before last month
0x17	Sdmax-m2	float	2	Apparent power demand in month before last month
0x19-0x20	/	/	/	Reversed
0x21	Vsc+	float	2	Positive sequence voltage in primary side
0x23	Vsc-	float	2	Negative sequence voltage in primary side
0x25	Vsc0	float	2	Zero sequence voltage in primary side
0x27	Isc+	float	2	Positive sequence current in primary side
0x29	Isc-	float	2	Negative sequence current in primary side
0x2b	Isc0	float	2	Zero sequence current in primary side
0x2d	Vsc-%	float	2	Percentage of negative sequence voltage
0x2f	Isc-%	float	2	Percentage of negative sequence current
0x31	Vd_a	float	2	A phase voltage deviation
0x33	Vd_b	float	2	B phase voltage deviation
0x35	Vd_c	float	2	C phase voltage deviation
0x37	Fd	float	2	Frequency deviation

Notes: Demand value use slip method, slip interval 1 minute, total of 15 minutes

Page_4:

Flicker & THD

Addr.	Item	Format	Length	Description
0x0	Page	char	0.5	0~15: for page 1 to 16
	Status	char	0.5	00: for success reading
0x1-0x18	Reserved	/	/	/
0x19	THDUa	int	1	A-phase Voltage THD, unit 0.1%
0x1a	THDUb	int	1	B-phase Voltage THD, unit 0.1%
0x1b	THDUc	int	1	C-phase Voltage THD, unit 0.1%
0x1c	THDia	int	1	A-phase Current THD, unit 0.1%
0x1d	THDib	int	1	B-phase Current THD, unit 0.1%
0x1e	THDic	int	1	C-phase Current THD, unit 0.1%
0x1f	TOHDUa	int	1	A phase voltage total odd harmonic distortion, unit 0.1%
0x20	TOHDUb	int	1	B phase voltage total odd harmonic distortion, unit 0.1%
0x21	TOHDUc	int	1	C phase voltage total odd harmonic distortion, unit 0.1%
0x22	TEHDUa	int	1	A phase voltage total even harmonic distortion, unit 0.1%
0x23	TEHDUb	int	1	B phase voltage total even harmonic distortion, unit 0.1%
0x24	TEHDUc	int	1	C phase voltage total even harmonic distortion, unit 0.1%
0x25	THFFUa	int	1	A phase voltage telephone harmonic form factor, unit 0.1%
0x26	THFFUb	int	1	B phase voltage telephone harmonic form factor, unit 0.1%
0x27	THFFUc	int	1	C phase voltage telephone harmonic form factor, unit 0.1%
0x28	CFUa	int	1	A phase voltage crest factor, unit 0.001
0x29	CFUb	int	1	B phase voltage crest factor, unit 0.001
0x2a	CFUc	int	1	C phase voltage crest factor, unit 0.001
0x2b	TOHDIa	int	1	A phase current total odd harmonic distortion, unit 0.1%
0x2c	TOHDIb	int	1	B phase current total odd harmonic distortion, unit 0.1%
0x2d	TOHDIc	int	1	C phase current total odd harmonic distortion, unit 0.1%
0x2e	TEHDIa	int	1	A phase current total even harmonic distortion, unit 0.1%
0x2f	TEHDIb	int	1	B phase current total even harmonic distortion, unit 0.1%
0x30	TEHDIc	int	1	C phase current total even harmonic distortion, unit 0.1%
0x31	KFIa	int	1	A phase current K factor, unit 0.01
0x32	KFIb	int	1	B phase current K factor, unit 0.01
0x33	KFIc	int	1	C phase current K factor, unit 0.01

Page_5:

TOU for secondary side

Addr.	Item	Format	Length	Description
0x0	Page	char	0.5	0~15: for page 1 to 16
	Status	char	0.5	00: for success reading
0x1	Cumulative_tol (Total)	long	2	The total energy
0x3	Cumulative_T1 (Sharp)	long	2	The total sharp energy
0x5	Cumulative_T2 (Peak)	long	2	The total peak energy
0x7	Cumulative_T3(Flat)	long	2	The total flat energy
0x9	Cumulative_T4 (Vally)	long	2	The total valley energy
0xb	Current_tol(Total)	long	2	Total energy of this month
0xd	Current_T1(Sharp)	long	2	Sharp energy of this month
0xf	Current_T2(Peak)	long	2	Peak energy of this month
0x11	Current_T3(Flat)	long	2	Flat energy of this month
0x13	Current_T4(Vally)	long	2	Valley energy of this month
0x15	Last_tol(Total)	long	2	Total energy of last month
0x17	Last _T1(Sharp)	long	2	Sharp energy of last month
0x19	Last _T2(Peak)	long	2	Peak energy of last month
0x1b	Last _T3(Flat)	long	2	Flat energy of last month
0x1d	Last _T4(Vally)	long	2	Valley energy of last month
0x1f	Prior_tol(Total)	long	2	Total energy of the month before last month
0x21	Prior_T1(Sharp)	long	2	Sharp energy of the month before last month
0x23	Prior_T2(Peak)	long	2	Peak energy of the month before last month
0x25	Prior_T3(Flat)	long	2	Flat energy of the month before last month
0x27	Prior_T4(Vally)	long	2	Valley energy of the month before last month

Page_6:

Phase A voltage 2-31th harmonics

Addr.	Item	Format	Length	Description
0x0	Page	char	0.5	0~15: for page 1 to 16
	Status	char	0.5	00: for success reading
0x1-0x32	HUa	int	50	A phase voltage harmonic content ratio for 2 to 31 times, unit 0.1%

Page_7:

Phase B voltage 2-31th harmonics

Addr.	Item	Format	Length	Description
0x0	Page	char	0.5	0~15: for page 1 to 16
	Status	char	0.5	00: for success reading
0x1-0x32	HUb	int	50	B phase voltage harmonic content ratio for 2 to 31 times, unit 0.1%

Page_8:

Phase C voltage 2-31th harmonics

Addr.	Item	Format	Length	Description
0x0	Page	char	0.5	0~15: for page 1 to 16
	Status	char	0.5	00: for success reading
0x1-0x32	HUc	int	50	C phase voltage harmonic content ratio for 2 to 31 times, unit 0.1%

Page_9:

Phase A current 2-31th harmonics

Addr.	Item	Format	Length	Description
0x0	Page	char	0.5	0~15: for page 1 to 16
	Status	char	0.5	00: for success reading
0x1-0x32	HIa	int	50	A phase current harmonic content ratio for 2 to 31 times, unit 0.1%

Page_10:

Phase B current 2-31th harmonics

Addr.	Item	Format	Length	Description
0x0	Page	char	0.5	0~15: for page 1 to 16
	Status	char	0.5	00: for success reading
0x1-0x32	HIb	int	50	B phase current harmonic content ratio for 2 to 31 times, unit 0.1%

Page_11:

Phase C current 2-31th harmonics

Addr.	Item	Format	Length	Description
0x0	Page	char	0.5	0~15: for page 1 to 16
	Status	char	0.5	00: for success reading
0x1-0x32	HIc	int	50	C phase current harmonic content ratio for 2 to 31 times, unit 0.1%

Page_12 to Page_16:

SOE record for last 50 list, SOE_1 for latest record,

Page 12	SOE_1-10
Page 13	SOE_11-20
Page 14	SOE_21-30
Page 15	SOE_31-40
Page 16	SOE_41-50

Notes: the structure of page 12 to 16 are same, in this file only use page 12 for example

Addr.	Item	Format	Length	Description
0x0	Page	char	0.5	0~15: for page 1 to 16
	Status	char	0.5	00: for success reading
0x1-0x5	SOE_1	int	5	Byte 0: SOE trig channel Byte 1: SOE event Byte 2,3: SOE trig value Byte 4: RTC: Year Byte 5: RTC: Month Byte 6: RTC: Day Byte 7: RTC: Time Byte 8: RTC: Minute Byte 9: RTC: Seconds
0x6-0xa	SOE_2	int	5	
0xb-0xf	SOE_3	int	5	
0x10-0x14	SOE_4	int	5	
0x15-0x19	SOE_5	int	5	
0x1a-0x1e	SOE_6	int	5	
0x1f-0x23	SOE_7	int	5	
0x24-0x28	SOE_8	int	5	
0x29-0x2d	SOE_9	int	5	
0x2e-0x32	SOE_10	int	5	

Byte 0	Byte 1	
1:DI1	100:Remote control	
2:DI2	101:UA upper alarm	132:UA lower alarm
3:DI3	102:UB upper alarm	133:UB lower alarm
4:DI4	103:UC upper alarm	134:UC lower alarm
5:DI5	104:UAB upper alarm	135:UAB lower alarm
6:DI6	105:UBC upper alarm	136:UBC lower alarm
101:DO1	106:UCA upper alarm	137:UCA lower alarm
102:DO2	107:UA/UB/UC upper alarm	138:UA/UB/UC lower alarm
103:DO3	108:IA upper alarm	139:IA lower alarm
104:DO4	109:IB upper alarm	140:IB lower alarm
	110:IC upper alarm	141:IC lower alarm
	111:IA/IB/IC3 upper alarm	142:IA/IB/IC3 lower alarm
	112:PA upper alarm	143:PA lower alarm
	113:PB upper alarm	144:PB lower alarm
	114:PC upper alarm	145:PC lower alarm
	115:total active power upper alarm	146:total active power lower alarm
	116:QA upper alarm	147:QA lower alarm
	117:QB upper alarm	148:QB lower alarm
	118:QC upper alarm	149:QC lower alarm
	119:total reactive power upper alarm	150:total reactive power lower alarm
		151:SA lower alarm
	120:SA upper alarm	152:SB lower alarm
	121:SB upper alarm	153:SC lower alarm

	122:SC upper alarm 123:total apparent power upper alarm 124:total power factor upper alarm 125:frequency upper alarm 126:DI1 close alarm 127:DI2 close alarm 128:DI3 close alarm 129:DI4 close alarm 130:DI5 close alarm 131:DI6 close alarm	154:total apparent power lower alarm 155:total power factor lower alarm 156:frequency lower alarm 157:DI1 open alarm 158:DI2 open alarm 159:DI3 open alarm 160:DI4 open alarm 161:DI5 open alarm 162:DI6 open alarm

9. - SAFETY CONSIDERATIONS

All installation specification described at the previous chapters named: **INSTALLATION AND STARTUP, INSTALLATION MODES and SPECIFICATIONS.**

Please note that with the instrument powered on, the terminals could be dangerous to touching and cover opening actions or elements removal may allow accessing dangerous parts. This instrument is factory-shipped at proper operation condition.

◆ The device must have a professional installation and maintenance
◆ Any operation of the device, you must cut off the input signal and power;

10. - MAINTENANCE

The BJ194… series meter does not require any special maintenance. No adjustment, maintenance or repairing action should be done when the instrument is open and powered on, should those actions are essential, high-qualified operators must perform them.

Before any adjustment, replacement, maintenance or repairing operation is carried out, the instrument must be disconnected from any power supply source.

When any protection failure is suspected to exist, the instrument must be immediately put out of service. The instrument's design allows a quick replacement in case of any failure.

11. - TECHNICAL SERVICE

FAQ's

1.- Once cabled and connected is seen to give a correct voltage and current reading, but shows negative values for active power (generation).

This is an error with the cabling for the current transformer secondary; the direction of the transformer current has to be respected as shown in the connection diagram. The current transformers have a two face primary; the current must pass from P1 to P2 giving the result in secondary (S1 and S2) of 5 amps.

The error stems from:

a). The current transformers have been incorrectly installed. As a result, it gives the direction of the current as passing from P2 to P1; to resolve this problem, the current transformer does not have to be dismantled and installed again, but the transformer secondary (S1 and S2) just has to be inverted.

b). The connection of the current secondary in the current transformers have been incorrectly connected; to resolve this problem just connect the S1 transformer secondary to the S1 on the meter and the S2 on the current transformer to the S2 on the meter.

2.- Once cabled and connected, is seen to give an incoherent Power factor and CosΦ reading (-0.01 or similar).

This is again a current transformer and voltage phase connection error phase A, must correspond to the current transformer installed in phase A; phase B, must correspond to the current transformer installed in phase B; and phase C, must correspond to the current transformer installed in phase C.

This connection terminal is clearly shown on the area side of the device.

3.- The measuring voltage and is displaying the secondary voltage (for example 110 volts).
Ensure that the voltage Transformer ratio has been correctly set (Please refer to voltage PT ratio setting section in chapter **SETUP PROCEDUCE**).

4.- Device does not correctly display the current reading. It shows values varying between 0 to 5 amps of current.
Ensure that the Current Transformer ratio has been correctly set; (Please refer to current CT ratio setting section in chapter **SETUP PROCEDUCE**).

Calculation formula of electrical parameter

Formula	Parameter
$U = \sqrt{\frac{1}{N}\sum_{n=0}^{N} u_n^2} \quad n = 0,1,2 \ldots \ldots N$	Voltage RMS value
$I = \sqrt{\frac{1}{N}\sum_{n=0}^{N} i_n^2} \quad n = 0,1,2 \ldots \ldots N$	Current RMS value
$P = \frac{1}{N}\sum_{n=1}^{N}(i_{an}u_{an} + i_{bn}u_{bn} + i_{cn}u_{cn})$	Total active power cycle average
$P_s = UI$	Single-phase apparent power cycle average
$\cos\theta = \frac{P_p}{P_S}$	Power factor
$P_q = \sqrt{P_S^2 - P_P^2}$	Reactive power (Pq is positive and the direction cannot be determined; P algorithm can be used to shift the voltage component by 90°)
$W = \int P * dt$	Electric energy

Note: In above formula, N for sampling points in one AC wave, In standard BJ-194Z, the N=128

For any inquiry about the instrument performance or any failure,
contact to Blue Jay's technical service.

Blue Jay - After-sales service

E-mail: tech@cqbluejay.com